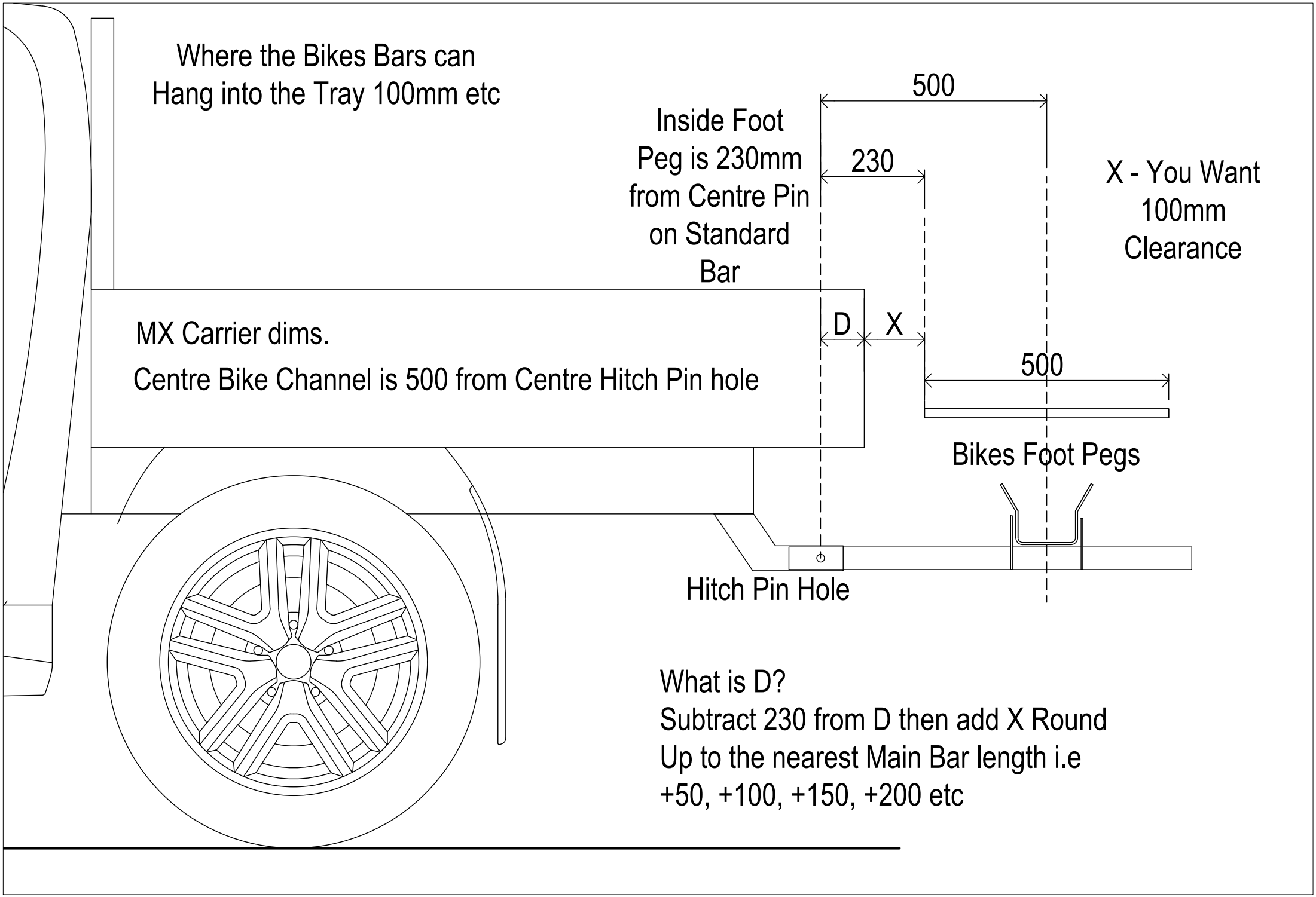
Where the Bikes Bars can
Hang into the Tray 100mm etc
500
Inside Foot
Peg is 230mm
from Centre Pin
on Standard
Bar
230
X - You Want
100mm
Clearance
MX Carrier dims.
Centre Bike Channel is 500 from Centre Hitch Pin hole
D
X
500
Bikes Foot Pegs
Hitch Pin Hole
What is D?
Subtract 230 from D then add X Round
Up to the nearest Main Bar length i.e
+50, +100, +150, +200 etc